TRUMPF

1800990	**Motor** ACC 500	J 100V 50/60Hz
1755296		USA 120V 50/60Hz
1800989		GB 110V 50Hz
1800988		CH 230V 50/60Hz
1757316		D 230V 50/60Hz
2007332		CN 220V 50Hz

订货号		备件
No. D'ORDINE		PEZZO DI RICAMBIO
NO. DE REF.		PIEZA DE RECAMBIO
NO. DE REF.		PIECE DE RECHANGE
ORDER NO.		SPARE PART
NO	BEST.-NR.	ERSATZTEIL
500	1813666	220-230V
	1813672	100-120V
501	1813664	
502	0029676	
503	1813671	
504	0101405	D 230V 50/60Hz
	0033236	CH 230V 50/60Hz
	0144869	GB 110V 50Hz
	0054266	USA 120V 50/60Hz
	0365624	J 100V 50/60Hz
	1641461	CN 220V 50Hz
505	1813674	
506	1813661	100-230V
507	1813665	
508	1813560	
509	0010073	
510	1751873	
511	1821572	
512	1821571	
513	1821460	
514	1821854	

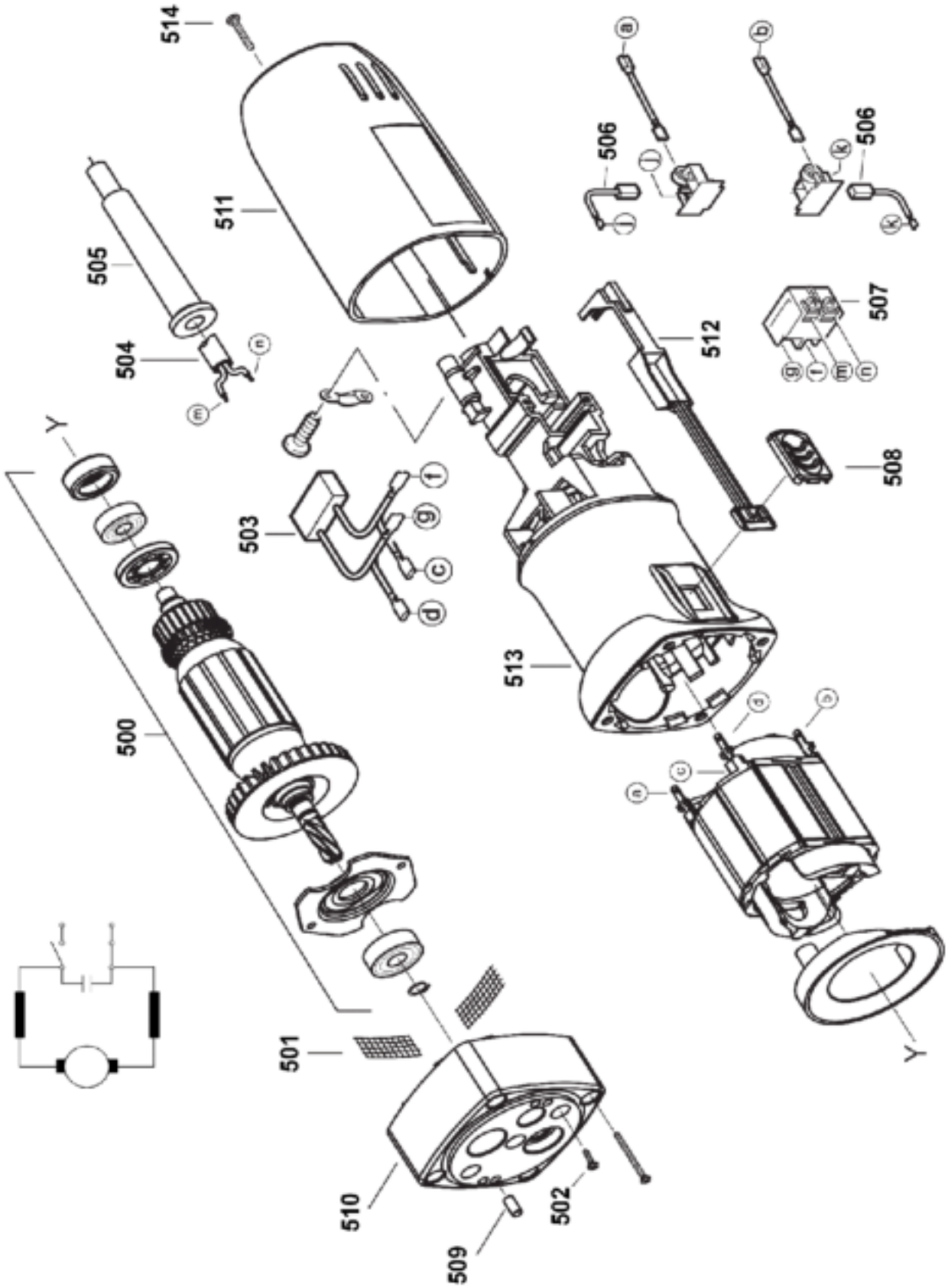
514
511
505
504
506
506
507
512
508
503
513
500
501
510
509
502